Chapter 10 Plesetsk Cosmodrome

Table of Contents

List of Figures

List of Tables

10 Plesetsk Cosmodrome

10.1 General Description

The *Rockot* Plesetsk launch site is located at 62.7° N latitude and 40.3° E longitude, about 800 km north-east of Moscow and 200 km south of Archangel (Figure 10-1).

The Plesetsk Cosmodrome was founded in 1963 as a test range for launchers. Since 1967 several international programmes with the participation of France, Germany, Great Britain and the USA have been launched from Plesetsk. Plesetsk Cosmodrome conducted over one third of all launches in the world with a total number of over 1500, including launches for some 30 Western and Asian satellites. Plesetsk Cosmodrome covers an area of 1752 km² and includes the non-civilian Pero Airport and a railway station, the town of Mirny, LOX and LN2 plant, ground tracking stations, integration and technical facilities and launch pads. The main layout of the Cosmodrome is shown in Figure 10-2.

The facilities used for the *Rockot* launch are:

- The launch complex comprising:
  - Ground support facilities including service tower, stationary mast, air conditioning system, fuelling system for stage 1 and stage 2, and equipment for launch preparation
  - Payload EGSE rooms in the undertable area
- Mission control centre (MCC) in Mirny, which provides:
  - Accommodation for the Customer during launch
  - Customer console seating
  - Countdown
  - Data display and transmission of launch information
  - Operational communications
  - Room for VIP/Catering
- Integration facility MIK with
  - General hall for offloading/ loading, container cleaning and storage
  - Clean room bay with upper composite integration room and processing room for spacecraft integration, testing and for spacecraft fuelling
  - Administrative area with offices and monitoring room
  - EGSE and fuelling control rooms
  - Capability for environmentally controlled spacecraft battery storage
- Helicopter landing pad
- Fuelling facility for the *Breeze-KM* upper stage.
- Airport
- Hotel *Rockot* in Mirny

All the facilities used for the *Rockot* launch are linked by rail and road. The *Rockot* dedicated launch pad is adjacent and the helicopter landing pad is in the vicinity of the MIK (Figure 10-2).

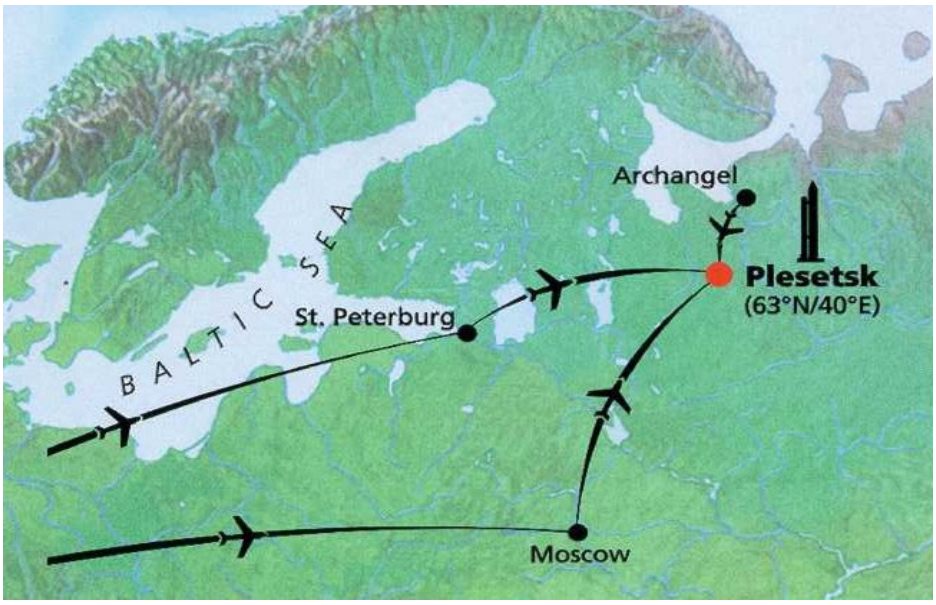

Figure 10-1 Geographical location of the Plesetsk Cosmodrome.

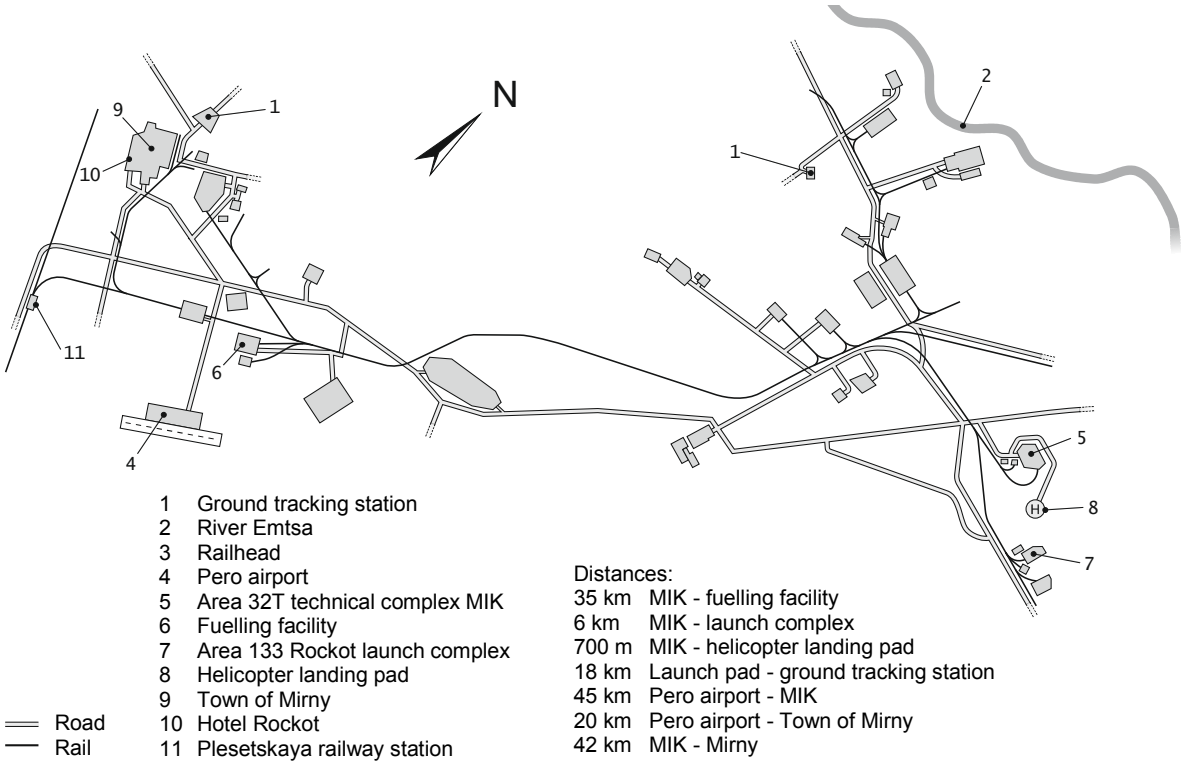

Figure 10-2 Plesetsk Cosmodrome layout.

10.1.1 Climatic Conditions

The climatic conditions in Plesetsk are continental, with the following characteristics:

- Minimum winter air temperature -38°C
- Maximum summer air temperature +33°C
- Average annual precipitation amount 398 mm

10.2 Logistics

The main goal of the logistics items described in the following is to provide an overview of how the transportation, especially of the spacecraft and related equipment as well as customer personnel to Plesetsk Cosmodrome can be performed. The transport logistics described herein are all qualified and operational and have been used by all EUROCKOT Customer's to date. Although not explicitly described, an identical but reverse transportation route will be used for return of spacecraft equipment and personnel after conclusion of the launch campaign.

10.2.1 Spacecraft and Hardware Transport

As a baseline, EUROCKOT's transportation responsibilities begin upon off-loading of the Customer spacecraft and equipment at the Russian port-of-entry, Talagi airport in Archangel. EUROCKOT supported by KSRC and its Russian subcontractors will provide a team and equipment to conduct off-loading and transfer activities from the aircraft all the way to EUROCKOT's processing facilities in Plesetsk Cosmodrome.

The Customer will also be fully supported by EUROCKOT and KSRC during the customs clearance process at the port-of-entry.

Table 10-1 gives an overview of the characteristics of Archangel Talagi and other airports potentially used. Archangel Talagi is able to handle the largest Russian cargo aircraft, the AN-124, which is generally the workhorse of the space industry for large transports (Figure 1-4). This port-of-entry is usually used by Customers for the import of their spacecraft and equipment to the Russian Federation.

The spacecraft and equipment transport to the EUROCKOT facilities is described below. An approximate timeline for a Customer from Asia is provided as an example for preliminary planning purposes. Aircraft arriving directly from Europe and the USA will have different arrival times due to their different time zones.

- Day one morning: arrival of the transport aircraft (e. g. AN-124) at the Russian port-of-entry Talagi airport in Archangel.
- Day one morning: off-loading and customs clearance in Talagi.
- Day one noon: loading of equipment onto EUROCKOT / KSRC supplied lorries and transfer at low speed to railhead over an approximate distance of 10 km (Figure 1-5).
- Day one afternoon to early evening: transfer and securing of spacecraft and equipment from lorries to railway wagons (Figure 1-6, Figure 1-7).
- Day one evening: departure of railway wagons to Plesetsk train station with a

travel distance of approximately 200 km. As the public railway system is used on this route, the transportation is conducted during the night in order to allow low travel speeds.

- Day two morning: arrival of train at Plesetsk train station and transfer to internal cosmodrome railway network.
- Day two morning: transfer on the cosmodrome internal rail network to the EUROCKOT processing facilities and subsequent off-loading of equipment (Figure 1-8).

An optional transportation path for spacecraft fitting into a standard 20 foot container or smaller is to fly to Pero airport at Plesetsk Cosmodrome using an IL-76 after an intermediate customs stop in Archangel Talagi airport.

Parameters	Sheremetyevo/ Domodedovo Moscow	Pulkovo, St. Petersburg	Talagi, Archangel	Pero, Plesetsk Cosmodrome*
Status of airport	International	International	International	Non-civilian
Runway length	3699 m 3794 m	3780 m	2500 m	2000 m
Surface solidity, PCN	No constraints	No constraints	44	11
Types of aircraft to be accommodated	All types	All types	AN-124, restrictions may apply to some other wide body aircraft types	IL-76, AN-72, AN-12, AN-24, YAK-42, Yak-40
Landing category	III A	II	II	I
Role of airport for spacecraft shipping	Port of entry back-up	Port of entry back-up	Nominal Port of entry	For small spacecraft only

* Pero Airport of Plesetsk Cosmodrome is operated and controlled by the Russian Space Forces (RSF) and can process civilian aircraft only if cleared by the Russian Ministry of Defence (MOD) general staff and possibly subject to special navigator availability on board.

Table 10-1 Characteristics of airports for shipping of spacecraft containers, related GSE and personnel transfer.

10.2.2 Transportation Requirements

The basic transportation requirements for spacecraft and related equipment are described in detail in the Customer's response to the spacecraft questionnaire data sheet (chapter 12), sent at the beginning of the project to customers and reviewed during the spacecraft to launch vehicle preliminary and critical design reviews. These requirements are transferred to the Joint Operations Plan. The requirements shall cover the following at least:

- Container handling and storage requirements
- Number, dimensions, weight, centre of mass, and material of all containers

- Container grounding requirements
- Necessity of immediate container transfer or possibility of intermediate storage upon arrival
- List of hazardous materials and their international codes
- Maximum allowable duration for interruption of container power supply and maximum/minimum allowable ambient temperatures during periods of cargo transhipment

10.2.3 Transport Environments

The spacecraft and its equipment will be subjected to mechanical and thermal environments during their transportation by air and on the ground as well as during ground handling. In section 5, the worst case transportation and handling loads are described. Electrical power can be supplied to the Customer for environmental control if the spacecraft container does not have its own power. Additionally, the results of transportation load measurements for rail and road transport are included.

10.2.3.1 Environmentally Controlled Transport of Spacecraft during Launch Campaign

For the transport of spacecraft as part of the launch vehicle upper composite from the payload processing facility (MIK) to the launch pad, a mobile thermal conditioning system is available (Figure 1-26).

In order to maintain the required temperature, moisture and cleanliness conditions under the fairing in the vicinity of the spacecraft, the thermal conditioning unit is connected to the upper composite after its assembly and reloading on the transportation unit. The characteristics of conditioned air can be taken from chapter 5.2.3.

10.2.4 Spacecraft Team Transport to Plesetsk Cosmodrome

Customer personnel transfer from the Russian port-of-entry to Plesetsk Cosmodrome, as well as the transfer from hotel to launch site facilities, will be arranged and supported by EUROCKOT/ KSRC. Upon request, quotes for air / rail transportation fees will be provided.

For entry to Russia, EUROCKOT will support the Customer's team in all necessary formalities for customs clearance and in the obtaining of visas for the spacecraft team. The entry to Russia and departure from Russia will also be assisted by EUROCKOT.

Normally, the spacecraft team will arrive at Sheremetyevo or Domodedovo International Airport, Moscow. The ongoing possibilities of transfer to Plesetsk Cosmodrome are described in the following chapters.

10.2.4.1 Charter Aircraft

Pero Airport at Plesetsk Cosmodrome has limitations on the aircraft size to be accommodated (Table 10-2). For the transport of the Customer's personnel, a YAK-40 aircraft will normally be used. The YAK-40 can be provided in an economy class configuration with 22 seats or in a configuration with 5 business class seats and 10 seats of economy class. The flight duration from Moscow to Plesetsk is approximately 2 hours.

10.2.4.2 Scheduled Flights

The nearest airport to Plesetsk Cosmodrome for scheduled flights is to Talagi airport in Archangel. The flight route Moscow - Archangel with a flight duration of approximately 1 hour 50 minutes is a regular scheduled route. EUROCKOT can arrange a special transfer from the airport to Plesetsk Cosmodrome by car taking approximately 5 hours.

10.2.4.3 Rail Transfer to Plesetsk Cosmodrome

A convenient alternative and non-weather constrained option for travelling to Plesetsk is by rail. The rail transfer from Moscow to Plesetskaya, which is 3 km south of Mirny, is via overnight train and takes 18 hours. This transportation route is especially suitable and cost-effective for transportation of small groups of personnel to and from the launch site. Please note that the overall travel time for the customer to the launch site from their foreign facilities is not much longer than via other routes. The travellers sleep in the train rather than staying overnight in Moscow and arrive the next day, as they would if they flew by charter aircraft. The sleeping compartments are of good standard and are comfortable and clean. Booking of sleeping compartments in the train can be arranged through EUROCKOT as well as a transfer to a domestic airport or railway station in Moscow.

If customers arrive by plane in Archangel, a transfer to Plesetsk can also be arranged by train taking approximately 5 hours.

The transfer from Plesetskaya station to Hotel *Rockot* in Mirny, which is located in the military restricted area of the Cosmodrome will be organised by EUROCKOT.

10.2.5 Customer Team Transport at the Launch Site

At the launch site, buses, minivans and, if necessary, lorries will be made available to transport the management team, technical support and security personnel to the work area during spacecraft processing and launch operations according to the daily working schedule. The distance between Hotel *Rockot*, where the Customer is accommodated, and the technical complex is 42 km. The transfer time by bus is approximately 45 minutes.

10.3 Communications

Reliable and independent national and international communication services are provided by the telecommunication system installed in Plesetsk Cosmodrome. All positions in the processing facility MIK, launch pad, mission control centre (MCC) and Hotel *Rockot* are interconnected by microwave or fiber-optic lines that are connected to international lines through Moscow via satellite (Figure 10-3). The following types of optional telecommunication services are available upon request:

- Local and international direct dial (IDD) phone lines
- Data lines
- LAN
- Mobile radios (IDD)
- CCTV
- Inmarsat

- Internet access and mail server
- Various types of telecommunications support at the MCC (Section 10.4.4)
- Entertainment TV in the hotel

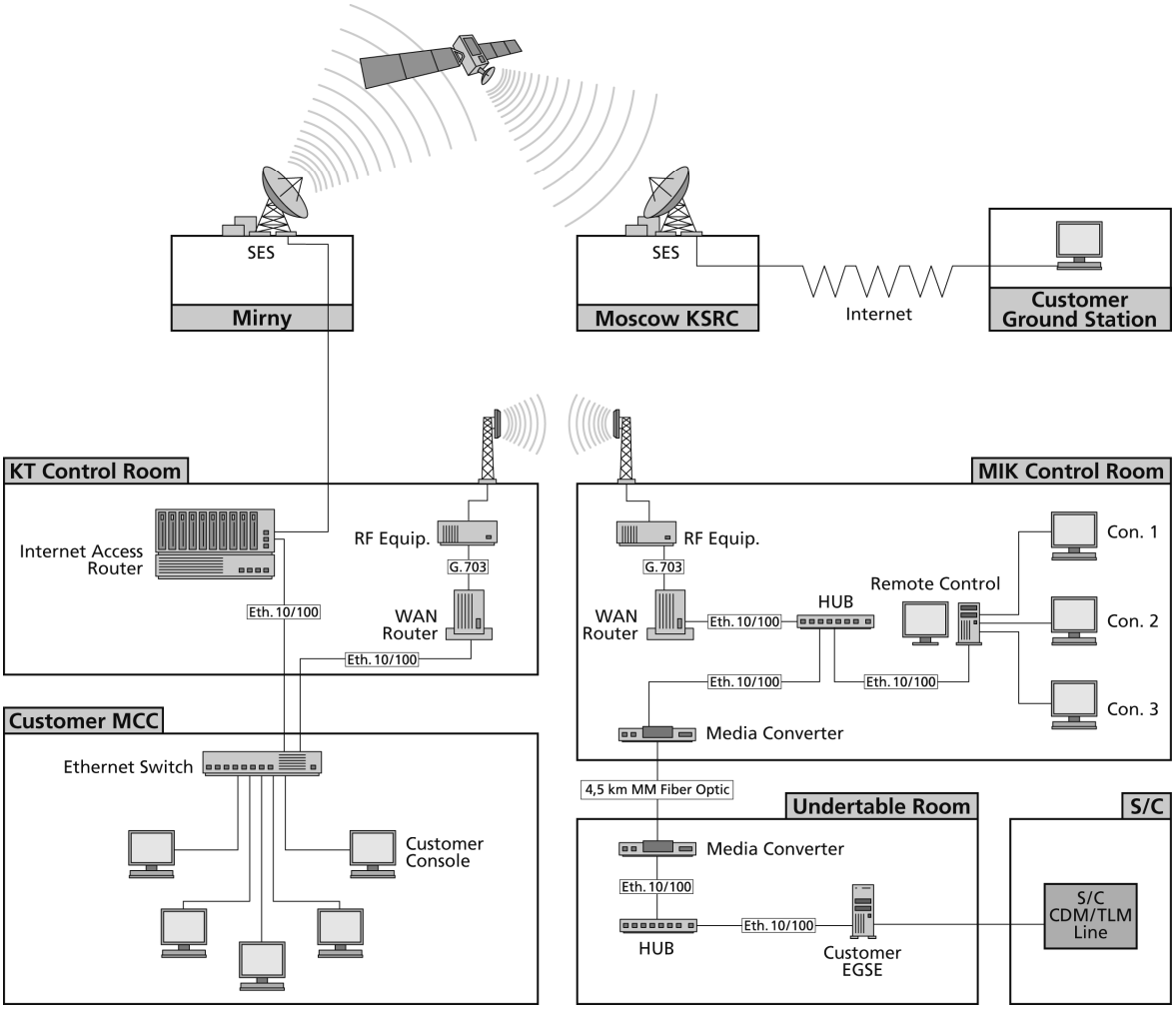

Figure 10-3 Communications links.

10.3.1 Phone Lines

The national and international phone lines support links between launch site facilities, the Mission Control Centre and the hotel. International calls can be placed from any phone line. Multi-purpose RJ 45 jacks are used to connect either digital or analogue phones. Access to mobile radios is possible within the phone network.

10.3.2 Data Lines

In order to support data transmission at the launch site, inter-area data lines connecting the integration facility MIK, the launch

complex and the hotel as well as international data lines are available. The launch site inter-area data lines comprise:

- Analogue interface for modem-based transmissions at up to 19.2 kbps
- ISDN interfaces for data rates of up to 128 kbps
- V.35 interfaces for data rates of up to 64 kbps
- Data transmission over a multi-mode fibre optic cable between the Undertable Room 7 and the integration facility
- LAN cable network in the MIK and Hotel *Rockot* with RJ45 interface. To interconnect the MIK LAN segment and hotel LAN segment into a network, a 2048 kbps channel is provided that runs through the MCC.
- Dial-up access to Internet and a mail server of up to 30 users at a time with V.90 protocol (56 kbps) from any analogue phone interface
- For access to Internet from the customer's LAN, a network infrastructure using Ethernet data lines is provided. Internet access from MIK and/or *Rockot* Hotel via dedicated lines to Moscow ISP makes use of a satellite channel with 64 Kbps to 2048 Kbps data rate.
- For spacecraft check-out while on the launch pad an Ethernet data exchange channel between the MIK and the launch pad can be provided. The Customer's EGSE LAN segment in the MIK and on the launch pad can communicate via media converters with Ethernet protocol operating through multimode fibre optic lines with a data rate of up to 10 MBits/s.

10.3.3 Mobile Radios

Mobile radio links will be available at the MIK, at the launch site, in the Customer accommodation area and also along the routes interconnecting any two of these locations. The mobile radio system operates in half duplex mode and supports either conference sessions or point-to-point links, with mobile radio access to or from the launch-base phone network being possible. The required quantity of calling groups will be pre-programmed in each portable radio in use by the Customer.

10.3.4 CCTV

Security video monitoring services will be provided at the integration facility and the launch complex. The system enables monitoring of the spacecraft and the Customer's GSE with the image sent to the Customer's rooms, taped and/or played back. The following video support is available at the launch site:

- Explosion-proof video cameras available in all clean rooms with the camera outputs delivered to the Customer's office
- Video monitors available in the Customer's office. Each video camera can be remotely controlled, i. e. panned, tilted, focused and/or zoomed from this office
- Video taping capabilities
- Video cameras available in the Undertable Room 7 to monitor the Customer's GSE. The outputs from these cameras

will be sent to the Customer offices in the MIK.

10.3.5 Entertainment TV

Four different TV channels in English, German and/or other languages upon request are available in each room of the *Rockot* Hotel used by the Customer's staff.

10.4 Ground Facilities

The facilities available to the customer for their spacecraft processing and launch campaign activities are described below.

EUROCKOT's facilities at the launch site have been specially designed and constructed to enable convenient implementation of customer security measures. For instance many of the facilities can be placed under the sole control of the Customer and, therefore, under his security control. For these areas, the Customer can implement access control procedures in accordance with Customer state governmental regulations. Within the MIK, the Customer has its closed dedicated area under its sole security control. Within this dedicated area the Customer can move without escort. This closed dedicated area contains:

- A spacecraft processing area for conducting autonomous spacecraft operations and spacecraft fuelling
- EGSE rooms for support equipment installation
- Change rooms, shower and rest rooms as well as an air shower
- Emergency exits with emergency showers and eye wash facility
- Office area

Access to the Customer area on the first and second floor of MIK can be gained via a separate entrance with staircase or escorted via the general MIK entrance. An additional staircase in the Customer's office area allows direct access to the foyer of the Customer's changing rooms. Entrance to the spacecraft processing area and EGSE rooms, as well as to the upper composite integration area in the case of joint operations, is possible without contact with military controlled areas.

At the launch complex, the Undertable Room 7 is dedicated to and under the security control of the Customer.

Video observation of the clean room area as well as the Undertable Room 7 can be performed from the Customer's security office. During launch, the separate mission control centre is used.

10.4.1 The Integration Facility MIK

The integration facility MIK (Figure 1-8, Figure 10-4), internally designated building 130 in area 32T, is located in the south-eastern part of the Cosmodrome at a distance of 6 km from the EUROCKOT launch complex and 42 km away from the town of Mirny. The spacecraft container and related equipment can be directly delivered to the MIK by helicopter. A helicopter landing pad is located in the vicinity of the MIK.

The integration facility is intended for acceptance, storage, assembly and checking

of boosters, *Breeze-KM* and fairing, acceptance of spacecraft, spacecraft operations and assembly of the upper composite. It comprises:

- General Hall with common work area
- Clean room bay, certified cleanliness ISO Class 8 with
  - hardware air-lock (54 m²) and personnel air-lock (101V)
  - clean room for the upper composite encapsulation (101B, 146 m²)
  - clean room for the spacecraft processing and fuelling (101A, 180 m²)
- Two EGSE rooms (111 and 111A)
- Administrative area with Customer offices and rooms for remote control

Customers requiring clean room cleanliness conditions better than the given standard should contact EUROCKOT for further information. Fuelling of spacecraft can take place on a fuelling platform in Room 101A within the closed clean area described above. This platform with an area of 9150 × 7620 mm contains a system for containment and drainage of minor spills smaller than 1 litre of hydrazine propellants. The spacecraft will be placed on a special-purpose 3000 × 3000 mm support adapter. Room 111A can be used as a fuelling control room. A viewing window between these rooms enables visual contact.

EUROCKOT can optionally provide a fuelling service performed by an experienced and qualified team.

The clean room bay is equipped with an oxygen content control system and a hydrazine monitoring system. Critical values will automatically initiate alarm by acoustic and visual means. Fire protection in the integration facility is provided not only in the usual way but also by a water deluge system on the walls and by water curtains on the doors of the clean room bay.

The floor in the MIK is made of anti-static and electrically conductive linoleum.

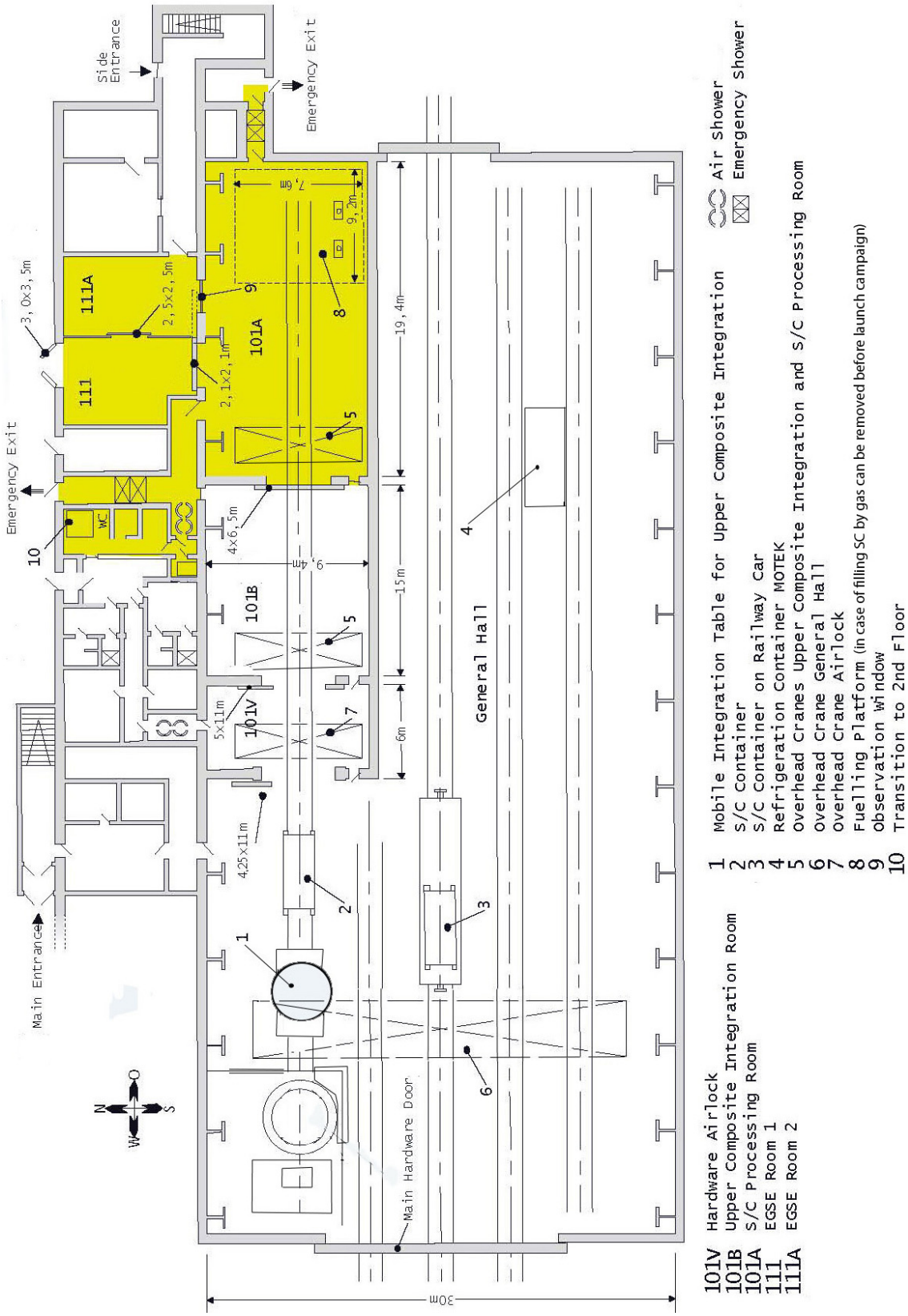

Figure 10-4 Layout of the integration facility MIK.

10.4.1.1 General Hall

The common work area (Figure 10-4) with 500 m² in the general hall of the MIK is dedicated for ground support equipment unloading, unpacking/ packing and short-time storage, booster preparation, autonomous checks of *Breeze-KM* and fairing, and electrical checks of the upper composite. For lifting operations, an overhead travelling crane with 30 tonnes lifting capacity is installed. The general hall is not environmentally controlled but can be kept at reasonable temperatures.

10.4.1.2 Clean Room Bay

The spacecraft processing as well as upper composite integration and encapsulation will take place in the closed clean area of the MIK (Figure 1-14) which is certified to cleanliness ISO Class 8. The particular parameters of environmental control can be taken from Section 5.2.2. Higher cleanliness levels can be provided as an option.

10.4.1.2.1 Airlock

The airlock (room 101V) located at the beginning of the clean room bay has a floor area of 54 m² (9.4 m wide and 6 m long). An overview of the equipment of the airlock is given below. The final cleaning of the spacecraft container and associated equipment will be done here.

Equipment of the airlock:

- Explosion-proof cameras for remote control
- Explosion-proof phones
- Wall mounts for 120 V 60 Hz and 380 / 220 V 50 Hz power supply
- 2 t overhead crane
- Sensors, acoustic and visual warning devices of oxygen control system
- Sensors, acoustic and visual warning devices of hydrazine/ oxidiser control system
- Particle counter
- Grounding terminals
- Emergency lighting
- Fire protection system
- The size of the door leading from the general hall to the airlock is 4.25 m wide x 11 m high

10.4.1.2.2 Upper Composite Integration Area

The upper composite integration area has an area of 146 m² and is located between the airlock and the spacecraft processing area. The upper composite integration area is intended for the mating of the spacecraft with *Breeze-KM* and assembling of the upper composite (Figure 10-5). The equipment of the upper composite integration area is stated below. The upper composite integration area is accessible for the Customer’s personnel from the clean room changing area under the Customer's security control after they have passed through the air shower.

The facility has two main doors for movement of spacecraft and equipment. The door to the airlock is 5 m wide x 11 m high, while the door to the spacecraft processing area is 4 m wide x 6.5 m high.

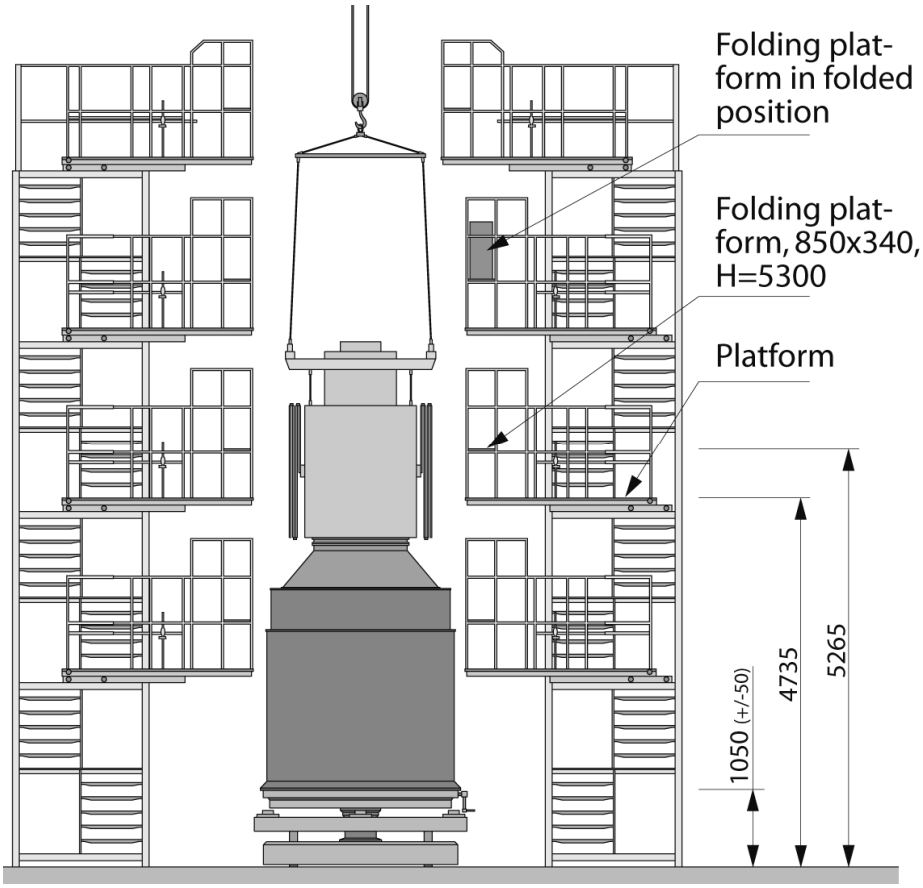

Figure 10-5 Assembly stand with platforms in upper composite integration room.

The upper composite integration room is equipped with:

- Explosion-proof cameras for remote control
- Explosion-proof phones
- LAN-drops
- Wall mounts for single and three phase 208/120 V 60 Hz and 380/220 V 50 Hz power supply
- 10 t overhead crane
- Assembly stand shown in Figure 10-5
- Emergency exit with emergency shower and eye wash facility
- Sensors, acoustic and visual warning devices of oxygen control system
- Sensors, acoustic and visual warning devices of hydrazine/ oxidizer control system
- Particle counter
- Grounding terminals
- Emergency lighting
- Fire protection system

10.4.1.2.3 Spacecraft Processing Area

The spacecraft processing area (room 101A), placed under Customer security control, covers a total area of 180 m². This area of the clean room bay is intended for spacecraft processing and comprises a 90 m² work area and a spacecraft fuelling area with 90 m². The spacecraft processing area is accessible for the Customer's personnel through a separate entrance from the clean room changing area under the Customer's security control after they have passed through the air shower. Two emergency exits are installed in the north and the east of the processing area, each comprising two showers and one eyewash facility. All operations in this spacecraft processing area can be monitored and recorded. Additionally, an explosion-proof window provides a view from EGSE room 111A which can be used as a fuelling control room, (section 10.4.1.3).

The facility's main door for movement of spacecraft and equipment from the upper composite integration area is 4 m wide x 6.5 m high.

For spacecraft fuelling operations, EUROCKOT can provide a removable fuelling platform (Figure 10-6) with a system for containment and drainage of minor spills of not more than 1 litre and a spacecrafft support adapter. This fuelling platform will be located in the spacecraft processing area. The fuelling platform is further designed to accommodate the fuelling equipment and propellant containers.

The provision of industrial-grade compressed air and technical water to wash out spillage as well as a blast shield to support operations involving high-pressure gases are standard services.

A rescue team will be on duty throughout the fuelling operations. This team will include a fire engine, an ambulance and a medevac car each fully manned.

Equipment of the spacecraft processing room:

- Explosion-proof cameras for remote control
- Explosion-proof phones
- LAN-drops
- Wall mounts for 208/120 V 60 Hz and 380/220 V 50 Hz power supply
- 10 t overhead crane
- Removable fuelling platform with a spillage containment and drainage collection system
- Two emergency exits with emergency showers and eye wash facilities
- Sensors, acoustic and optic warning devices of oxygen control system
- Sensors, acoustic and visual warning devices of hydrazine / oxidizer control system
- Particle counter
- Grounding terminals
- Emergency lighting
- Fire protection/extinguishing system
- Industrial-grade compressed air supply
- Industrial-grade water supply to wash down spillages
- Blast shield to support operations involving high-pressure gases

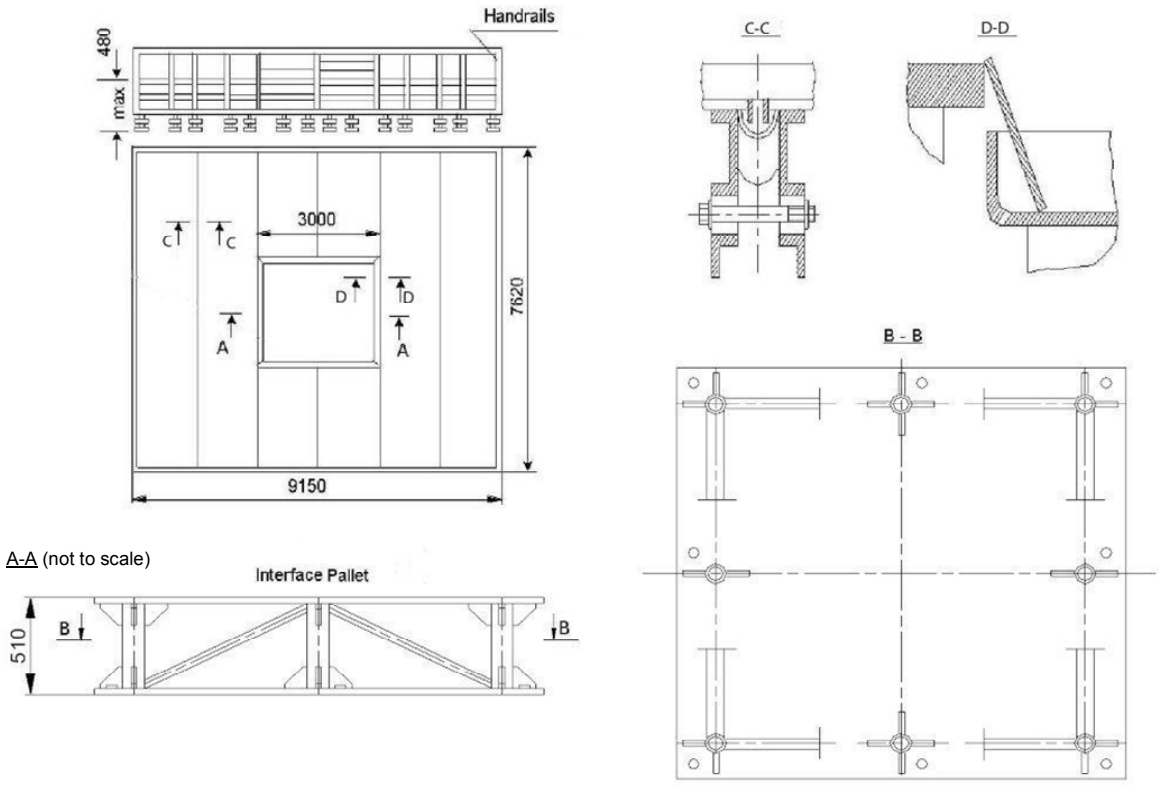

Figure 10-6 Scheme of removable fuelling platform.

10.4.1.3 EGSE Rooms

Adjacent to the clean area, an EGSE room with an overall floor area of 100 m^2 is located. A wire-mesh bulkhead with a 2.5 m wide × 2.5 m high sliding door subdivides this room into room 111 with 60 m^2 and room 111A with 40 m^2.

These rooms can be used for accommodation of the electrical equipment and fuelling equipment and can accommodate stations tooled up to support spacecraft processing.

The Customer's personnel can access room 111A from the office area on the second floor.

Room 111A is equipped with a viewing window to observe operations in the spacecraft processing area. If fuelling of the spacecraft is performed in the spacecraft processing area, room 111A can be used as a fuelling control room.

Room 111 has a door 3 m wide x 3.5 m high to transfer hardware from outside the building.

There is a 2.1 m wide x 2.1 m high door between room 111 and the spacecraft processing area. This door can be opened for the time the GSE is being set up. However, it will be airtight sealed during clean operations.

If the spacecraft battery stored in room 111 needs cooling, the MOTEK battery cool cabin built around a 20 foot sea shipping container can be provided upon request.

Equipment of EGSE rooms:

- Cameras for remote control
- Monitors (optional)
- Phones
- LAN-drops
- Wall mounts for 208/120 V 60 Hz and 380/220 V 50 Hz power supply
- Ground terminals
- Emergency lighting
- Common fire protection system
- Optional optical and/or RF link terminals to the SC and/or Customer's EGSE at the Launch Pad.

10.4.1.4 Customer's Office Area

The Customer's offices are located on the 2nd floor of the integration facility extension in the vicinity of EUROCKOT and KSRC offices (Figure 10-7). The second floor is above the EGSE rooms and clean room changing area. Access to the Customer's office area is provided via the common MIK entrance or by a separate staircase. The entrances to the Customer's office area corridor are secured by lockable doors.

The administrative area for the Customer comprises seven offices (4 x 41 m² and 3 x 20 m²) dedicated to sole Customer use (Figure 10-5). All rooms are equipped with heating, smoke detectors and fire extinguishing systems and have a telephone / fax capability, LAN- drops and a 60 Hz and 50 Hz power supply. Room 210 of the Customer's office area provides direct access to the changing rooms of the clean area by stairs. Room 209 provides video monitoring capabilities for the TV cameras which are installed in the processing area for security and safety needs.

Office equipment such as fax devices, electronic data processing system and computer monitors, copy machines, overhead projectors etc. are available upon request.

10.4.1.5 Handling and Hoisting Equipment in MIK

The main handling and hoisting equipment in MIK comprises:

- Boom lift
- Fork lift
- Rail car
- Trolley for adapter with spacecraft
- Mobile integration table
- Upper composite assembly stand

10.4.1.6 Power Supply of MIK

Uninterrupted power is supplied in all Customer dedicated areas in the MIK, airlock and Upper Composite integration hall with 208/120 V at 60 Hz and 380/220V at 50 Hz.

The 208/120 V, 60 Hz Power Supply System (PSS) is a self-contained power supply system set incorporating two diesel-generators and two uninterruptible power sources (UPS). The PSS specifications are listed in Table 10-2.

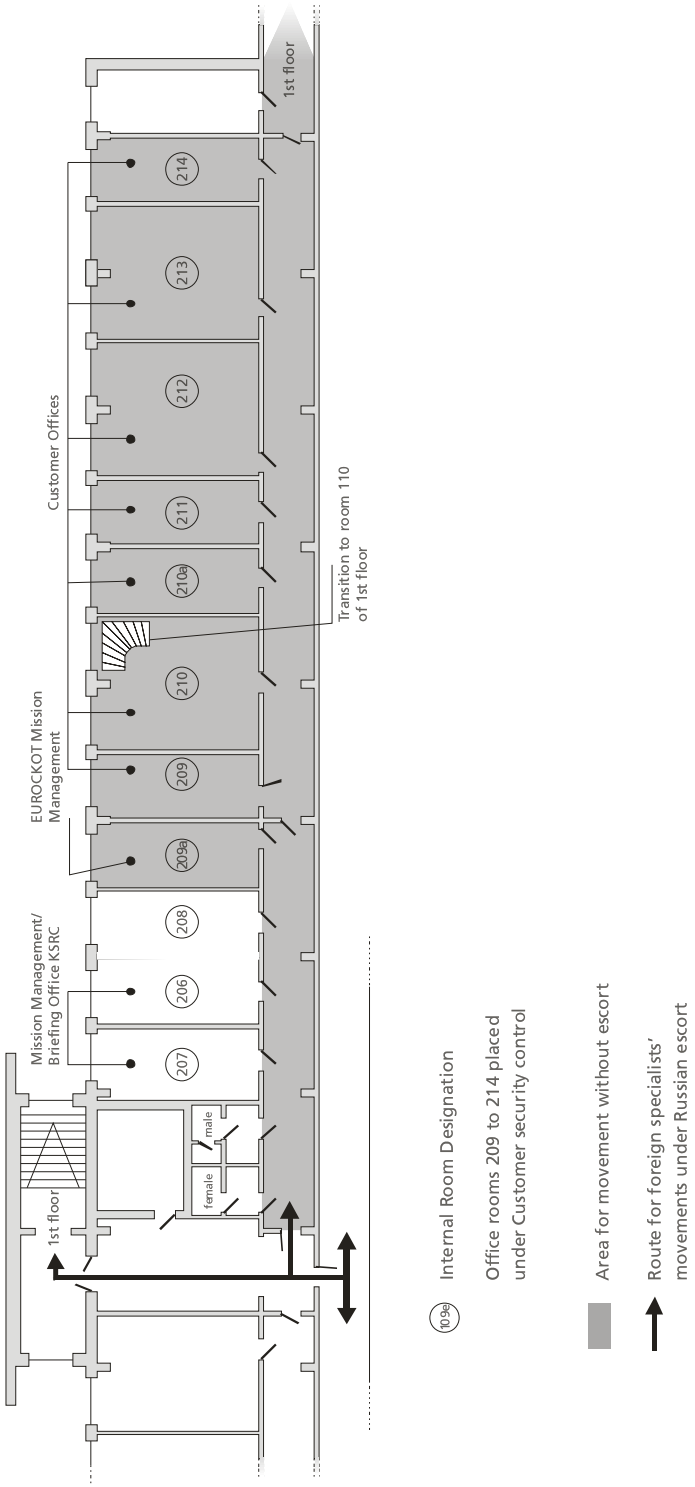

Figure 10-7 Customer office area in MIK.

The power supply system can operate non-stop for 30 days before it is turned off for maintenance work. In the case of failure of either a diesel generator (DG) or an uninterruptible power source (UPS), the other DG or UPS will run at rated 100% power output. The uninterruptible power source includes built-in battery-supported converters providing 100 kW power for not less than 10 minutes.

50 Hz UPS power is also provided in the EGSE rooms as single or three phase power supply to a total maximum rate of 30 kVA. The specification of the 50 Hz UPS power supply system is given in Table 10-3.

Item	Description
Rated power output	100 kV·A (cos φ = 0.8)
Power change under load (power consumers)	From 0 to 100% of the rated output
Line/phase output voltage	208/120 V
Voltage waveform	Continuous sinewave
Current frequency	60 Hz
Stable output voltage variation	±1%, continuous with the load increasing from 0 to 100% and falling back to 0
Overload capacity at power output of	110% ≤ 20 min 125% ≤ 10 min 150% ≤ 1 min 200% ≤ 1 s
Stable output frequency deviation	±0.1 %
Total harmonic distortion factor	< 3% in static conditions < 5% in dynamic conditions
Storage battery capacity	At least 10 min
Voltage regulator response time	< 5 ms
Radio interference level	Below "N" as per VDE 0875
Efficiency at rated load	> 90%
Protection to DIN 40050 Standard	1P21
Duration of system operation	Continuous and uninterrupted for up to 30 days
Type of system of current-carrying conductors	Three-phase, five-wire (A, B, C – phases, N – neutral wire, PE – protective earth wire)

Table 10-2 Specification of 208/120 V 60 Hz AC processing facility power supply system.

Item	Description
Rated power output	30 kV·A (cos φ = 0.7)
Power change under load (power consumers)	From 0 to 100 % of the rated output
Line/phase output voltage	380/220V
Voltage waveform	Continuous sinewave
Current frequency	50 Hz
Output voltage variation with continuous load variation	±1% within period from 0 to 100 % and falling back to 0
Output voltage variation with stepwise load variation	±5% within period from 0 to 100 % and falling back to 0
Stable output frequency deviation	±0.1%, continuous
Storage battery capacity	At least 10 min
Efficiency at rated load	> 90 %
Duration of system operation	Continuous and uninterrupted for up to 30 days
Capacity of storage battery	Not less than 10 minutes
Type of system of current-carrying conductors	Three-phase, five-wire (A, B, C – phases, N – neutral wire, PE – protective earth wire)

Table 10-3 Specification of 380/220 V 50 Hz AC processing facility uninterrupted power supply system.

10.4.2 The *Rockot* Launch Complex

The launch complex as shown in Figure 10-8 is dedicated to *Rockot* launches exclusively for use by EUROCKOT. In the course of rebuilding and renovating work for all *Rockot* dedicated facilities in the years 1999 and 2000, the *Rockot* launch complex underwent a complete renewal, so that today all equipment is state-of-the-art.

The *Rockot* Launch Complex is situated in the north-east area of Plesetsk Cosmodrome, at a distance of 6 km from the MIK. The railroad ends directly in front of the launch table for loading and unloading the booster stages and upper composite. A site plan of the *Rockot* launch complex is shown in Figure 10-8.

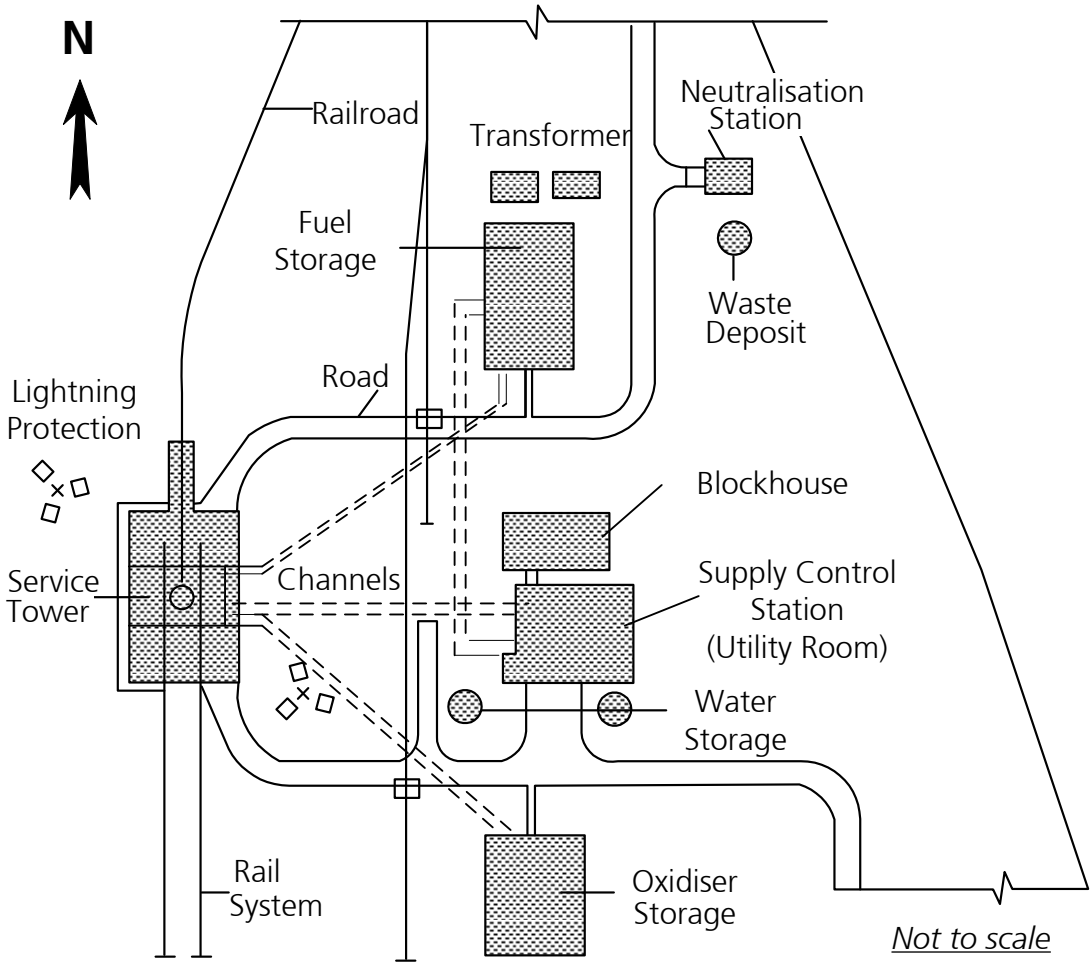

Figure 10-8 Launch complex for *Rockot*.

10.4.2.1 Launch Pad

The launch pad includes a launch table with launch equipment and a stationary mast, surrounded by the mobile service tower during launch vehicle processing (Figure 10-9).

The launch table is equipped with retractable supports for the alignment of the launch vehicle and with metal gas deflectors. The surface around the launch table is covered with reinforced concrete.

The mobile service tower is designed for vertical integration of the Upper Composite with the *Rockot* booster. In the closed gate position, the service tower encloses the *Rockot* to allow all-weather operations. The service tower is equipped with a lift and working platforms at several levels to provide access to the launch vehicle service areas. A special adapter frame serves for the transportation and launch container (TLC) erection, whereas an overhead travelling crane ensures zero impact mating of the upper composite with stage 2 of the *Rockot* booster unit.

Retraction of the mobile service tower occurs approximately 10 minutes before

lift-off. At lift-off, the distance between the rolled-back service tower and the stationary column with *Rockot* in the TLC is approximately 50 m (Figure 1-23).

The stationary column is designed to fasten and hold the booster unit in the TLC at the moment of launch. Electrical cables, air ducts and fluid lines to the launch vehicle are maintained via the stationary column. The stationary column also accommodates the ground control equipment devices, the launch vehicle azimuth positioning system and the remote control system.

10.4.2.2 Undertable Rooms

Undertable rooms contain the launch vehicle EGSE and pre-launch processing equipment, the fuelling system for booster stage 1 and stage 2 and the payload air conditioning system. For the Customer's use, one undertable room, designated as Undertable Room 7 with an area of 26 m² is provided (Figure 10-10). This Undertable Room 7, containing the equipment stated below, is dedicated for the accommodation of the spacecraft on-board battery trickle charging equipment and other items at the launch pad. Access to the undertable rooms is possible except during launch vehicle fuelling operations, during final countdown and launch. Monitoring equipment for the spacecraft parameters can be situated in room 213/111A of the Customer office area in the MIK. The Undertable Room 7 is linked to room 213/111A via a fibre optic cable. The Customer shall provide the equipment for connecting the fibres.

The harness length from the Undertable Room 7 to the spacecraft umbilical connectors is approximately 80 metres.

The equipment of the Undertable Room 7 includes:

- Camera for remote control monitoring due to security reasons
- Phones
- Wall mounts for 208/120 V 60 Hz and 380/220 V 50 Hz power supply
- Fibre optic cable access

10.4.2.3 Power Supply of Launch Complex

The launch complex has its own independent UPS system. Power of 208/120 V at 60 Hz with nominal output power of 100kVA and 380/220V at 50 Hz with 10 kVA is supplied in the Undertable Room 7.

The launch complex power supply system is similar to that of the MIK (section 10.4.1.6). The only difference is the rated output power of 380/220V at 50 Hz equal to 10 kV·A.

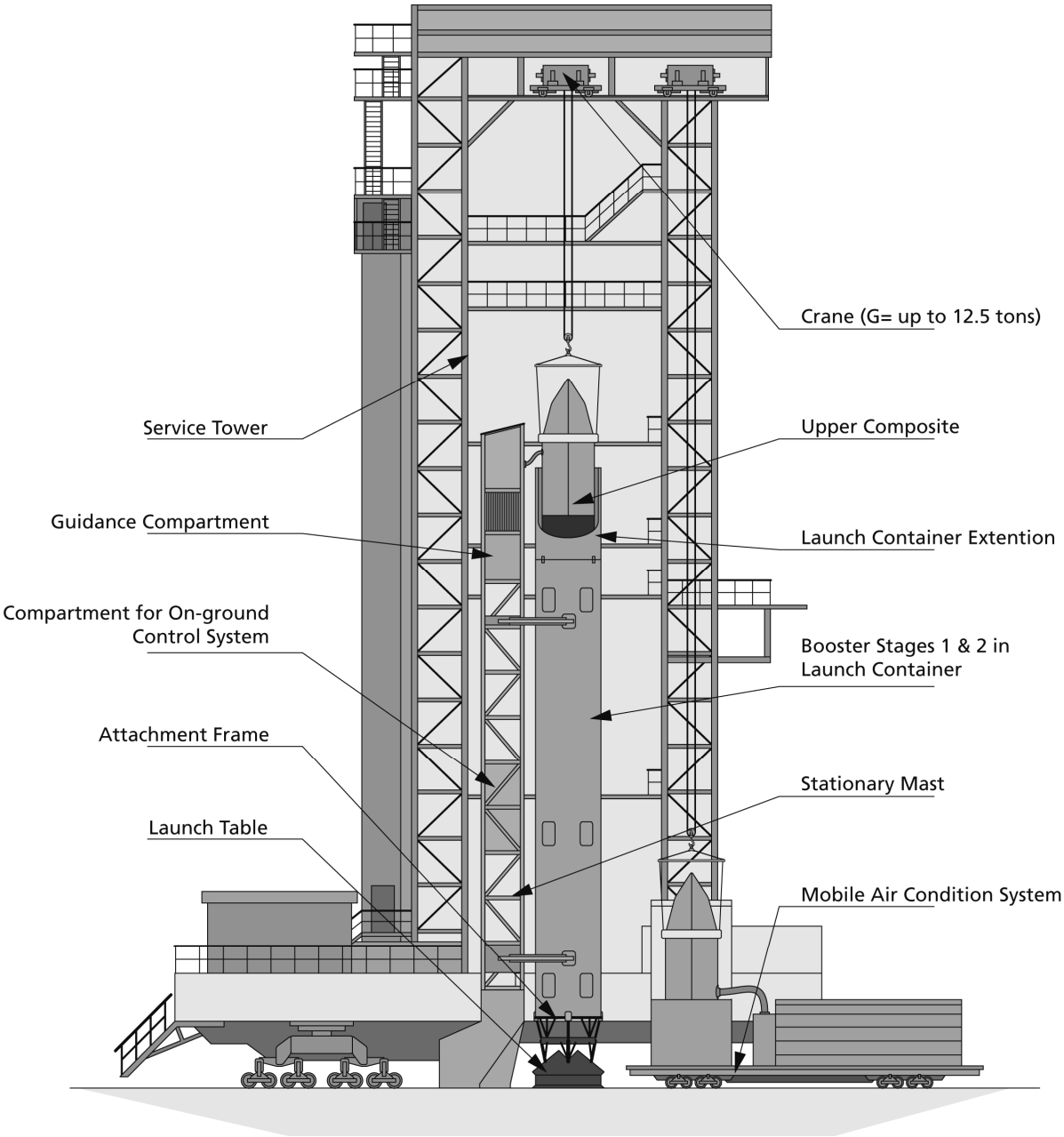

Figure 10-9 ***Rockot*** **launch pad.**

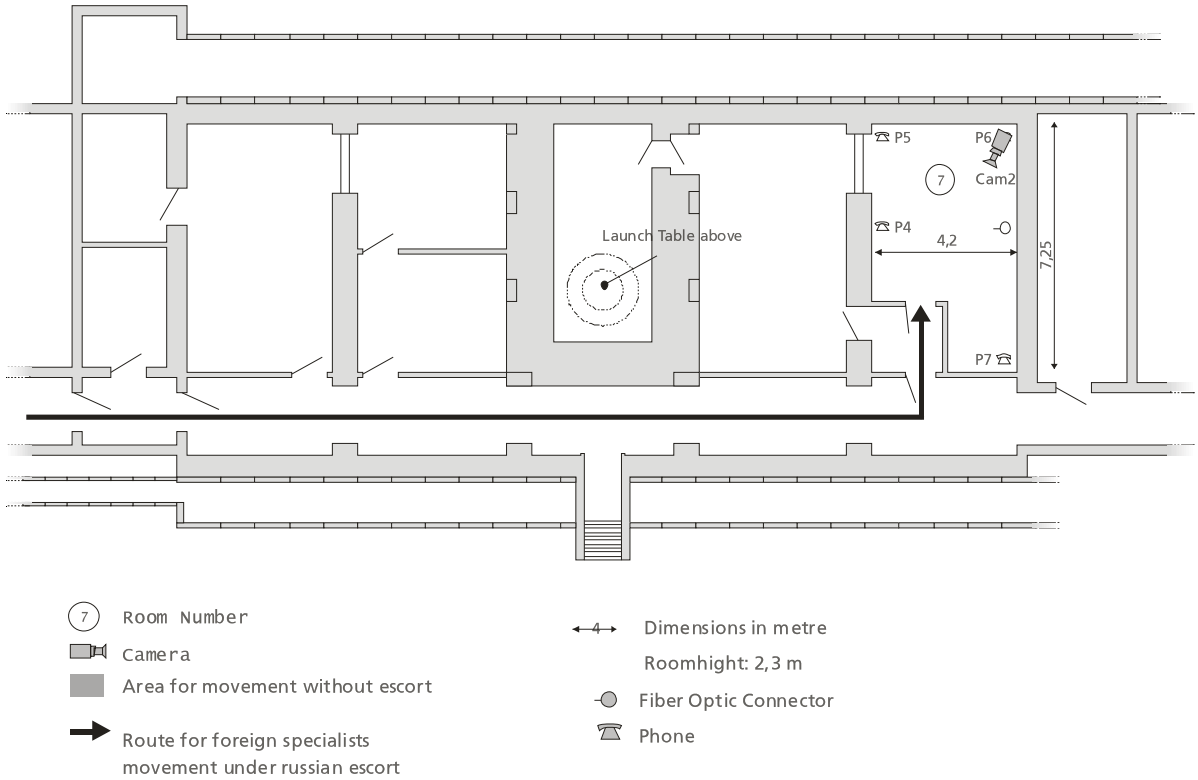

Figure 10-10 Undertable Room 7 for Customer's use.

10.4.2.4 Air Conditioning of the Spacecraft at the Launch Pad

After encapsulation, air conditioning of the payload is provided during transportation of the upper composite to the pad and up to 30 seconds before lift-off. Depending on the fairing design, purging of the spacecraft batteries can also be performed, if required. Interruption of the payload air conditioning occurs only for periods of no longer than one hour each.

At the launch pad, the stationary air conditioning equipment is located under the launch table and the air duct passes through the stationary mast. The air duct and the air inlet of the fairing are connected via a flexible tube.

The air conditioning lines will only be disconnected during lift-off. In the case of a launch cancellation the air conditioning system will be switched on again within 1 minute. The air conditioning system for the spacecraft and spacecraft batteries is compatible with ISO Class 8 cleanliness or optionally ISO Class 7 (chapter 5). EUROCKOT will provide periodic monitoring of air temperature, humidity and flow of fairing air with a minimum interval of 15 minutes during the time the spacecraft is on the launch pad.

10.4.3 The Mission Control Centre

The Mission Control Centre (Figure 1-26), located in the town of Mirny at a distance

of approximately 40 km from the launch pad, provides:

- Local, interurban and international telephone communications with the capability of telephone conferencing
- Video and audio reporting from the launch site in real time
- Countdown information
- Transmission and receive of the formats in electronic and fax form
- Operational communications with launch support services including backup communications, Inmarsat and public GSM
- Display and transmission of launch information in real time
- Go/ no-go system for the spacecraft operator as well as go/ no-go display panel and launch vehicle status.

The following data can be displayed on large size wall panels:

- CoG motions of stages 1 and 2, the upper stage and the fairing during powered flight in the ascent phase, ranging data, key flight events such as staging and jettisoning of the fairing, major telemetry data down link and tip-off angles.
- Sub-orbital unit track on an earth map accompanied by the display of ranging data, key flight events such as upper stage burns, major telemetry data down link timelines for ground telemetry stations, and predicted or actual orbit parameters
- Computer-generated presentation of spacecraft motion about its CoG, with the viewing angle and solar exposure. In this mode, staging events are displayed and several upper stage performance quantities are presented in numerical form
- 3D motion of the item's CoG against the earth background and several orbit parameters in numerical form
- Generalised state vector including geodetic predicted position as well as actual orbit parameters, and the predicted as well as telemetered *Breeze-KM* engine performance
- Live launch coverage

The MCC is equipped with hardware and software which allows integration of any other information, coming e. g. from other monitoring facilities during and after spacecraft injection, into the set of data displayed. In addition, processed flight data can be compressed and sent to any remote user to be decompressed and displayed.

10.5 Launch Campaign

10.5.1 Responsibilities and Operational Organisation

EUROCKOT / KSRC is responsible for the preparation of the launch vehicle and combined operations. The Russian Space Forces execute *Rockot/Breeze-KM* operations including launch as subcontractors to EUROCKOT / KSRC.

EUROCKOT/KSRC will conduct the installation of the Customer's spacecraft on the adapter. Additional support shall be mutually agreed between EUROCKOT / KSRC and the Customer. The spacecraft prepara-

tion will be performed under the responsibility of the Customer and its launch site team.

During the launch campaign, a core of the EUROCKOT team responsible for the specific Customer mission will be present at the range as day-to-day intermediaries between Customer, KSRC and the range authority to coordinate the spacecraft launch site support requirements as well as to accompany the Customer's launch site team in all matters. The EUROCKOT team is supported by a KSRC team at the range. Both teams ensure undisturbed execution of all necessary operations until launch and the fulfilment of spacecraft support requirements in accordance with the launch site requirements.

10.5.2 Planning

Spacecraft launch site operations and the relevant requirements will be specified in the Spacecraft Operations Plan (SOP) as well as the responses to the spacecraft questionnaire from EUROCKOT. These Customer-generated documents should address all operational and logistical support requirements.

All spacecraft activities and technical facilities will be controlled at the launch site according to Joint Operations Plan (JOP) jointly established with EUROCKOT.

The JOP gives an overview of the spacecraft operations and joint operations to be conducted at the launch site, and defines ground rules for all involved parties at the range. The JOP is established to define the equipment and support needed at the launch site for both spacecraft and joint operations in order to ensure undisturbed working conditions for the Customer. Due to the parallel processing of spacecraft and launcher up to the joint operations prior to launch, these activities have to be coordinated to ensure the availability of necessary equipment and support personnel and the accessibility of facilities, taking into account the security and safety matters of all parties involved.

During the launch campaign, a daily schedule meeting will be held with the participation of all parties involved, Customer, EUROCKOT/KSRC and attendees from the Russian Space Forces . The goal of this meeting is to

- communicate the status of the work
- identify issues that require immediate attention
- define the schedule and coordinate operations for the next day with a view to the support personnel needed, access to facilities, transportation needs, lunch times,
- coordinate future joint operations and
- adapt the launch campaign schedule, if necessary.

10.5.3 Procedures and Logbook of Works

Every process will have an approved procedure. These procedures will identify the necessary equipment, personnel, documentation and facility requirements in detail to complete the process. The related launch site procedures will be carried out under consideration of safety and security regulations of the Russian Government and the Customer state government. All procedures for joint operations have to be

signed off by the Customer and EUROCKOT / KSRC.

All joint operations will be documented in a logbook. The joint working steps are documented in Russian and English language and have to be signed off by all parties upon completion of the work.

10.5.4 Training / Briefings

Training and briefings for the spacecraft operations team will be performed before the start of the spacecraft operations. Such training and briefings comprise:

- Familiarisation with emergency evacuation procedures and all alarms
- Communications equipment operations
- Security requirements and briefings
- Training to operate launch site specific equipment

10.5.5 Security and Access Control

The security requirements for Plesetsk will be defined in the joint launch site security plan. This document considers the requirements from the Russian side as well as the requirements of the Customer state government.

10.5.6 Safety

The safety regulations (chapter 9) define the rules applicable to all operations and the constraints to be observed in the definition and performance of launch vehicle and spacecraft operations.

10.5.7 Launch Campaign Operations

The launch campaign operations, especially the spacecraft operations described in the following, serve the purposes of orientation. For a programme, the duration of a launch campaign will be tailored to the Customer's requirements. A final and detailed Launch Operations Schedule which includes a statement of the precise duration of all operations, will be established after definition of the Joint Operations Plan (JOP) together with the Customer.

A typical Customer launch campaign from the arrival of the spacecraft and related equipment at the Cosmodrome until launch will last approximately 28 days (Figure 10-11), up to three days needed for post-launch activities have to be added. A complete launch campaign, which also takes the launch vehicle operations into account, consists of three major parts:

- Launch vehicle stand-alone operations, duration 16 days
- Spacecraft operations, duration depending on Customer needs, average duration 14 days
- Combined operations, duration 14 days

The spacecraft and its support equipment will arrive on day L-29 at the Russian port-of-entry, accordingly the spacecraft reception team will usually arrive there earlier to prepare for the delivery and the ongoing transport to the launch site.

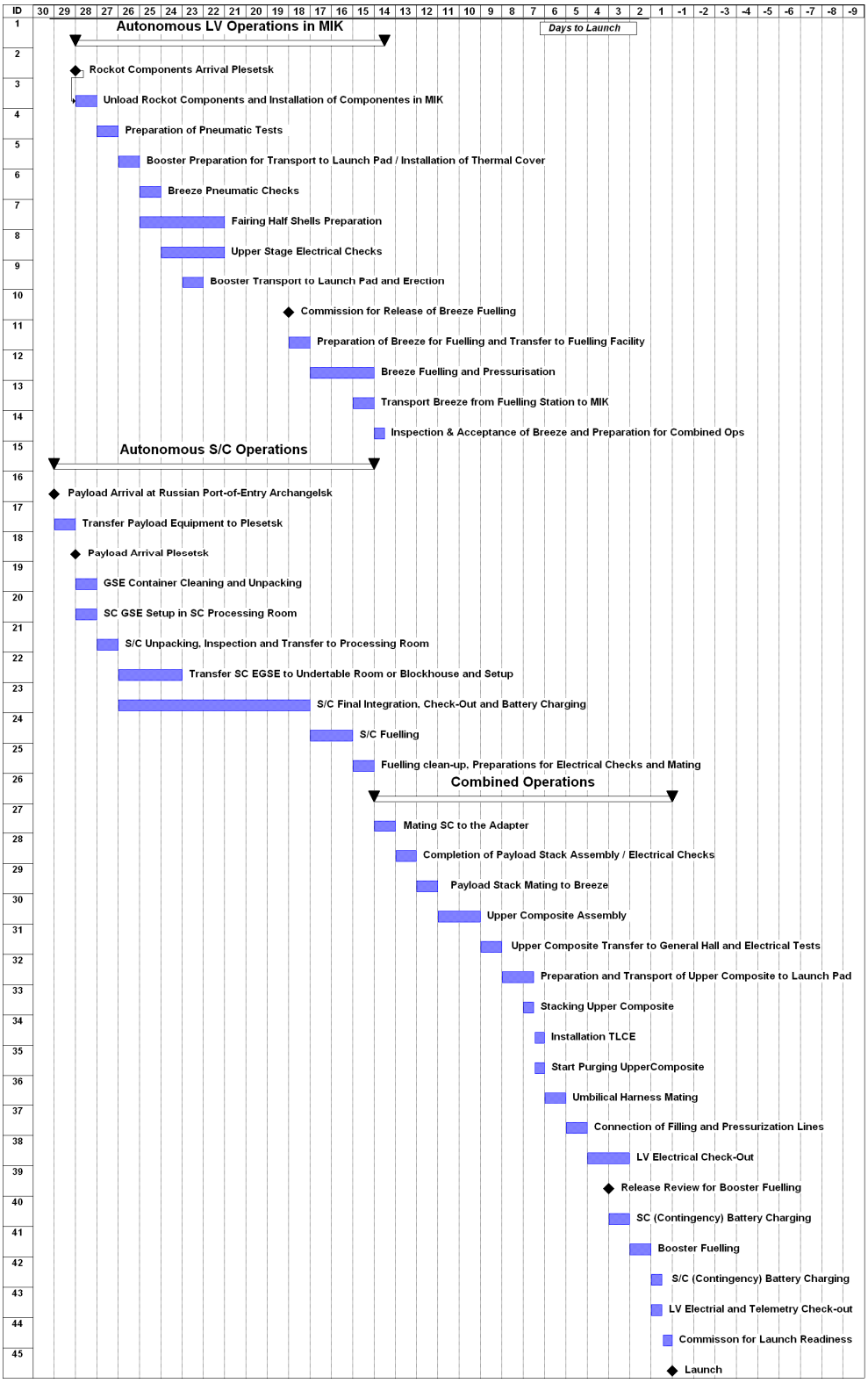

Figure 10-11 Schedule of operations.

The combined operations start on day L-14 usually with mating the spacecraft to the launch vehicle adapter.

The launch vehicle processing is performed in parallel with the space vehicle processing. The major launch vehicle processing, spacecraft operations and combined launch vehicle / spacecraft tasks are summarised in the operations schedule (Figure 10-12).

10.5.7.1 Launch Vehicle Operations in MIK and at Launch Complex

The stand-alone launch vehicle operations at the launch site typically start on day L-28 with the arrival of the *Rockot* components at the MIK processing facility and end on day L-14 with the start of combined operations.

Before the components of the upper composite are prepared for spacecraft integration and assembly, an electrical *Breeze-KM* / booster interface check-out is performed at the launch pad. For this purpose, the upper composite will be assembled, transported to the launch pad and stacked on the second stage. All operations dedicated to the electrical *Breeze-KM* / booster interface check-out activities are similar to the launch operations, but do not include the fuelling of the upper stage and are performed without the spacecraft.

The main launch vehicle stand-alone operations up to the start of the combined operations are shown in Figure 10-12 and the sequence in Figure 10-13.

10.5.7.2 Spacecraft Operations

The spacecraft operations at the launch site nominally start on day L-19 with the arrival of the spacecraft and spacecraft GSE container.

The spacecraft autonomous operations are conducted in the spacecraft processing area of the clean room bay of MIK.

The order of spacecraft fuelling and mating the spacecraft to the adapter may be changed depending on mission specific preferences.

10.5.7.3 Combined Operations in MIK

The combined operations of launch vehicle and spacecraft in MIK nominally start on day L-14 with mating the spacecraft to the adapter to configure the payload stack. The stack integration is usually be performed in the spacecraft processing area (room 101A). All upper composite operations, i. e. spacecraft / *Breeze-KM* and fairing assembly, are performed in vertical orientation.

The independent preparations of all upper composite components are completed when the payload stack is transferred from the spacecraft processing area to the upper composite integration area of the clean room bay on a dedicated dolly. The prepared and fuelled *Breeze-KM* is assembled on the mobile integration table and the fairing is separated into halves. The specific combined operations tasks are shown in Figure 10-12 and Figure 10-13.

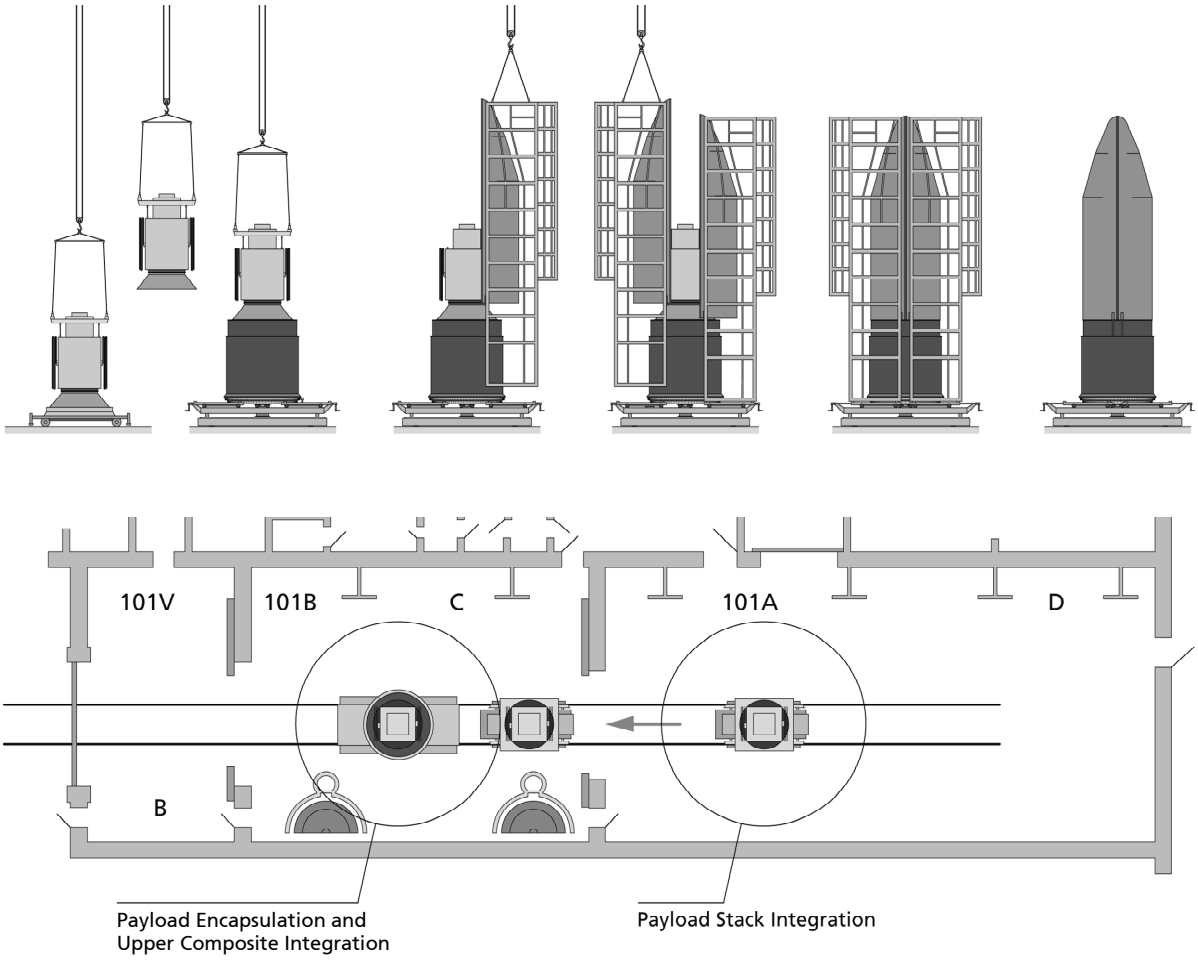

Figure 10-12 Flow of combined operations in MIK.

10.5.7.4 Combined Operations at the Launch Pad

The upper composite with the spacecraft arrives at the launch pad on day L-7 for mating. The air conditioning of the spacecraft will be stopped four times for short periods during ILV integration with each shut-down period lasting no more than one hour. Air conditioning is interrupted for the first time when the Upper Composite is being lifted into the service tower. During ongoing Upper Composite preparations for mating, the air conditioning system is activated. The air conditioning is interrupted for the second time during Upper Composite installation onto the booster. The third interruption takes place when the stiffening ring is removed and the fourth shut-down occurs when the transport launch container extension is installed on the transport launch container. The tasks performed at the launch pad, such as *Rockot* booster erection and mating of the upper composite are shown in Figure 1-20 to 1-23 and schematically in Figure 10-13.

A Launch Readiness Review (LRR) on day L-3 the so-called “State Commission”. gives permission for booster fuelling.

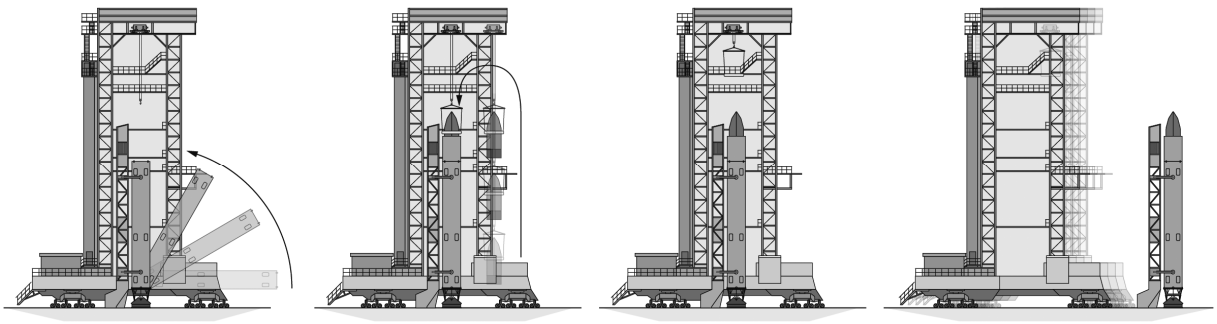

Figure 10-13 Launch pad operations.

10.5.8 Launch Day

After the performance of all electrical check-out operations and the telemetry readiness check carried out on the launch day, the State Commission decides about the launch and the start of the count-down. The constitution of the management envisioned on the launch day, as well as their role during countdown, will be defined in the JOP. The chairman of the commission will decide on the readiness for launch after readiness report of all participated parties:

- Weather conditions
- Launch pad status
- Launch vehicle ground tracking stations
- Launch vehicle ground measurements
- Spacecraft status
- Communications network
- Launch conditions (launch window, GO / NO-GO criteria, launch abort)
- Launch vehicle status

The Launch Operations Leader conducts the launch according to the criteria that will be defined in the JOP. The previous launch decision may be affected at any time during the final count-down by modifications or anomalies of the launch configuration. All the modifications of the previous launch configuration must be reported in real time to the Operations Leader.

The Launch Operations Leader observes the GO / NO-GO criteria and holds the count-down, if necessary.

About 10 minutes before launch the service tower is withdrawn, whereas the air conditioning for the spacecraft will continue until 30 seconds before launch. Mechanical access to the payload after encapsulation is not planned as a standard service. However, access via umbilical connectors will be provided during any operation phase after encapsulation, e. g. for battery trickle charging and communication.

All operations, boundary conditions, communication links and other relevant information are prepared, agreed and documented in the Launch Operation Schedule (LOS), the guiding document for the launch day.

10.5.9 Abort Re-Cycle/ Return-to-Base Operation

In the case where the launch has to be postponed, the Launch Operations Leader requests an agreement from the various management representatives.

If the count-down is held on the scheduled launch day inside the launch window without any malfunctions of the launch vehicle or spacecraft systems, the launch will be postponed at least by one hour required for launch systems readiness and at the most by 48 hours, for SSO launches usually by one day. During this delay, the launch vehicle can remain filled on the launch table, assuming the environmental temperature is within the allowable range.

In the case of launch delay, thermal conditioning for the upper composite is provided. The thermal conditioning system will be switched on one minute after launch cancellation.

If any malfunction is detected that could not be solved in-situ, related either to the launch vehicle or to the spacecraft systems, the booster will be defueled and the upper composite will be removed from the booster unit and transported back to MIK. All defects and failures on the spacecraft are repaired within the spacecraft processing area, whereas all defects and failures of *Breeze-KM* are repaired in the upper composite integration area of the clean room bay. After repair and check-out are finished, the upper composite will be integrated and transported back to the launch pad, re-integrated on top of the booster unit, and the launch preparation cycle will begin again. The booster unit remains at the pad during this process.

10.6 Accommodation and Leisure Activities

Customers will be accommodated in the Hotel *Rockot* in the town of Mirny (Figure 1-35). Mirny is the Cosmodrome's main supporting town and has a well-developed social infrastructure.

The international standard Hotel *Rockot* was refurbished in 1999 in order to satisfy all needs of EUROCKOT Customers. The common areas of the hotel comprise a meeting room, TV lounge that can be arranged as a fitness room as well as a bar and restaurant.

Each hotel room contains a bathroom, a desk, refrigerator, telephone, TV set able to receive Russian, local and satellite TV programs and LAN outlet. The telephone link may also be used for dial-up to a local internet server and e-mail account. In total there are 39 guest rooms available.

One guest room on the second floor can be used as a Customer office. A LAN patch panel leading to each room and a 64 kbps modem interface to PBX are terminated in the entrance area of this room. The hotel LAN is connected to the processing area LAN.

For the safety of the guests, the hotel has a fire alarm system. Each room is equipped with fire detectors and there are smoke detectors on the corridors. In the event of an alarm, an audible alert will be sounded in the lobby area and on each floor. Fire hoses, plumbing and emergency exits are installed on each floor.

In the immediate vicinity of the hotel there are two stadiums, tennis, volleyball and basketball courts, and an indoor athletics

complex accommodating a swimming pool, a gym and a fitness centre. Trips to wildlife areas or historic places, sightseeing, sports events and games, jogging and use of the athletic complex facilities and sauna can also be arranged.

10.7 Medical Care

A well-equipped military hospital can treat up to 200 patients. The medical team is trained to the highest standard available in Russia. Ambulances are available. Companies offering rapid medical evacuation services to Western Europe can be arranged upon request.